# EFIE device , oxygen sensor enhancer schematics

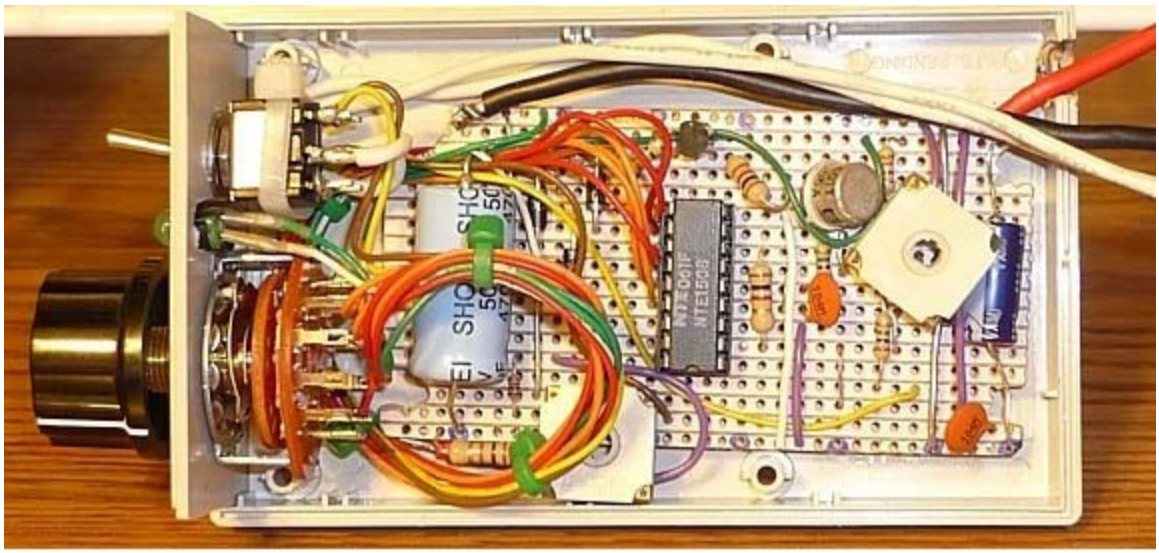

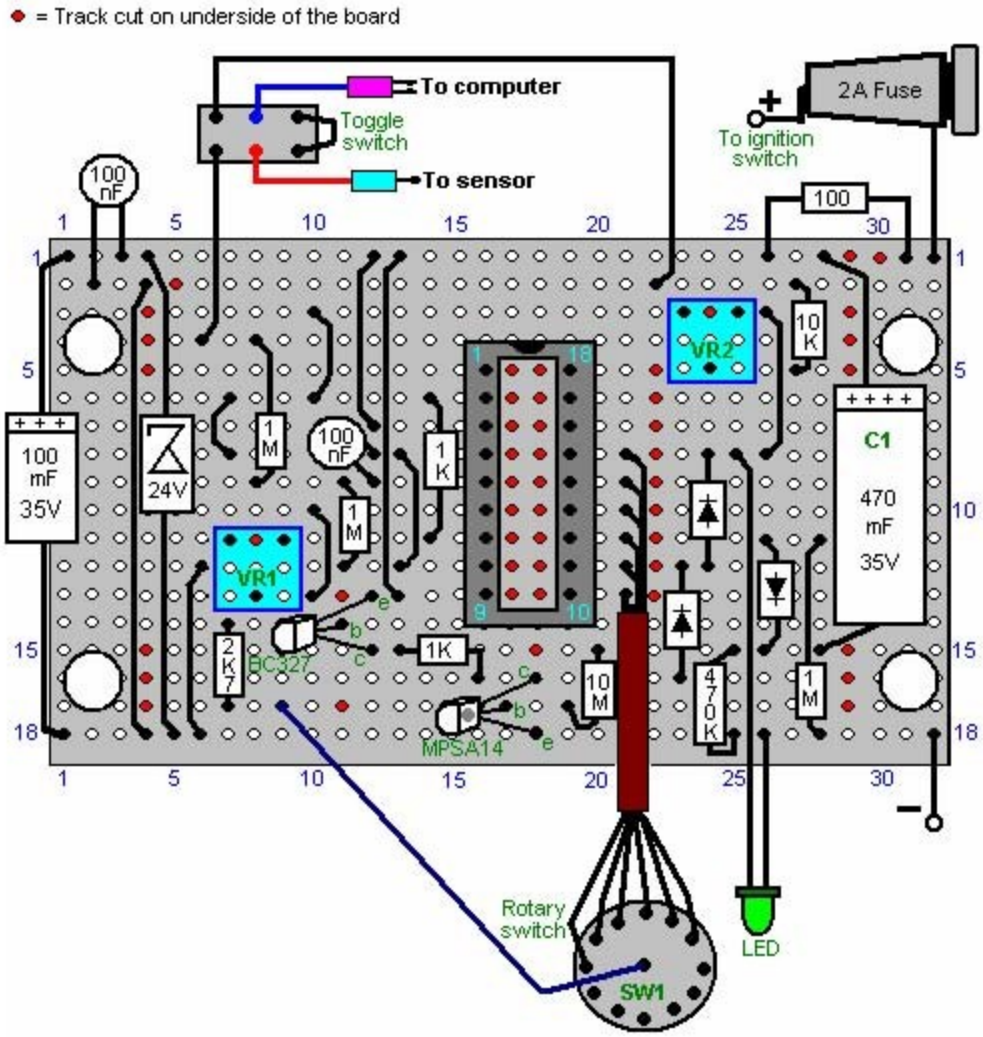
= Track cut on underside of the board
To computer
Toggle switch
To sensor
2A Fuse
To ignition switch
100 nF
100
100 mF 35V
24V
1 M
100 nF
1 K
1 M
VR1
VR2
10 K
C1
470 mF 35V
2K7
BC327
1K
10 M
470K
1 M
MPSA14
Rotary switch
SW1
LED

another view of the schematic

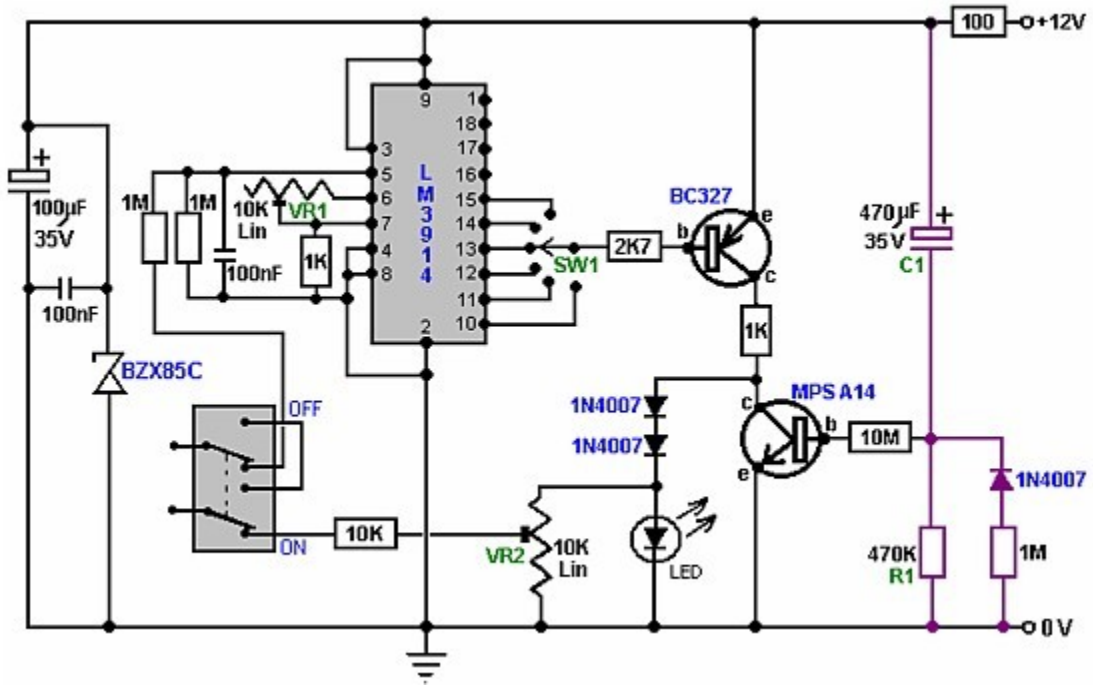


use the electronics tutorial that is on this CD to identify the various parts, bread board switches resistors ect.
you can purchase these parts from

http://www.allelectronics.com/
or
http://www.mouser.com/
or
http://www.alliedelec.com/

PLEASE READ THE TUTORIAL ON THIS CD